Ricavato da :

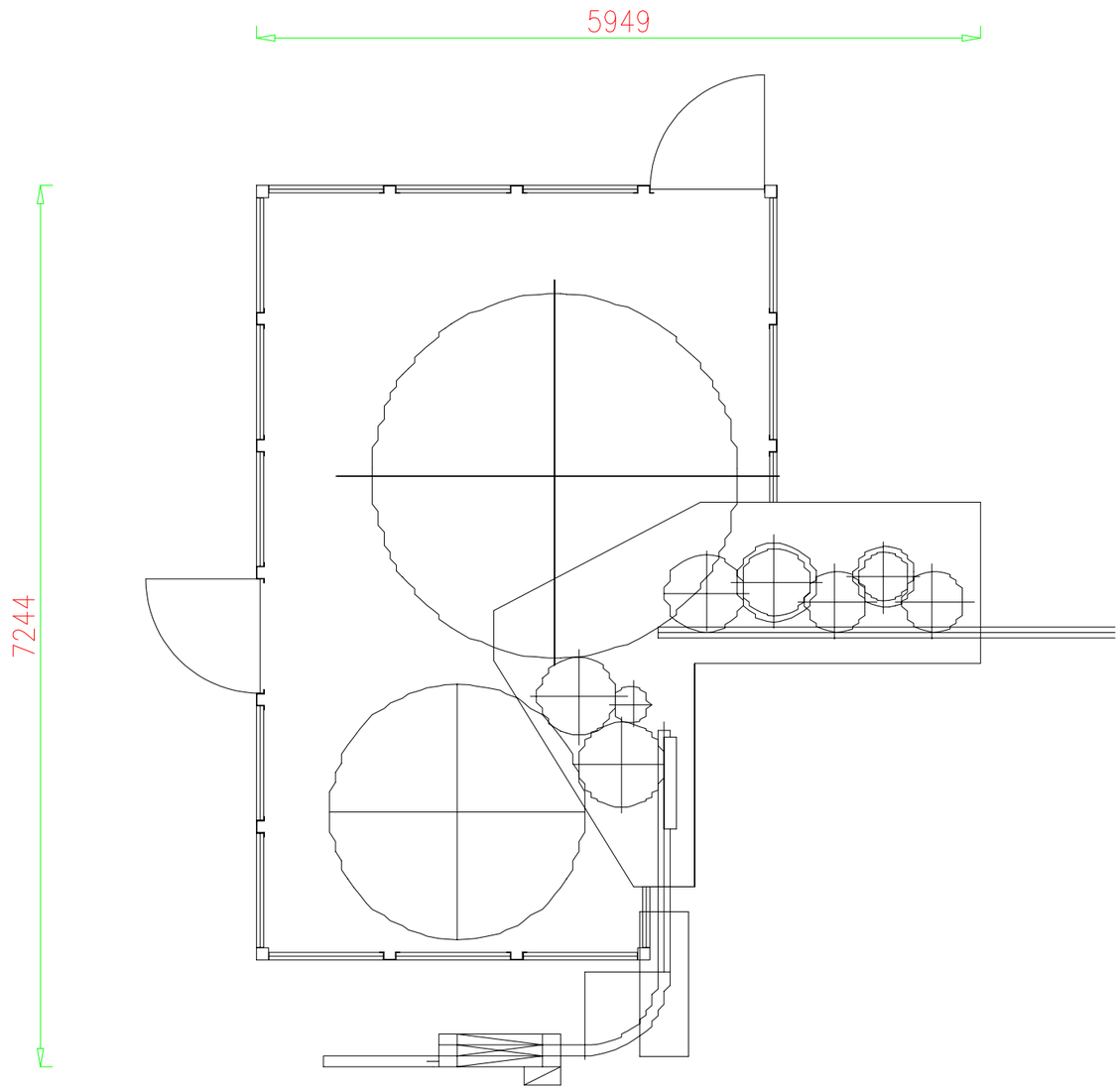


Note: *Please always refer to the weight information of each equipment to check the compliance with the floor capacity, especially for those installations not at ground level*

*Ladders and Platforms are not in the Sidel scope unless specified in the quotation*

| | | |
|---|---|---|
| Customer : | BBM BY YOUR SIDE IN PACKAGING | |
| Location: | Business Opportunity: | Date : 2025 |
| Scope of supply: FULL LINE / PARTIAL LINE / STAND ALONE / UPGRADE | Drawn by : UC | Scale : 1:50 |
| PRELIMINARY LAYOUT | FOR INFORMATION ONLY | |

This Drawing is BBM property and contains or may contain BBM confidential information. Information contained in this drawing is of a confidential nature and shall at all times be kept strictly confidential by the recipient and shall not be disclosed to any third party without BBM's express consent. This drawing shall not be used directly or indirectly by the recipient for any purpose other than that for which it was expressly issued by BBM. All Intellectual Property Rights, including Copyright, are reserved to BBM. No representation or warranty, express or implied, is made by BBM with respect to the truth, accuracy, sufficiency or absence of defect of the information contained in this drawing or with respect to third party intellectual property rights.

| | |
|---|---|
| Drawing N°. - CAD file: BBM | Format A3 |