Ricavato da :

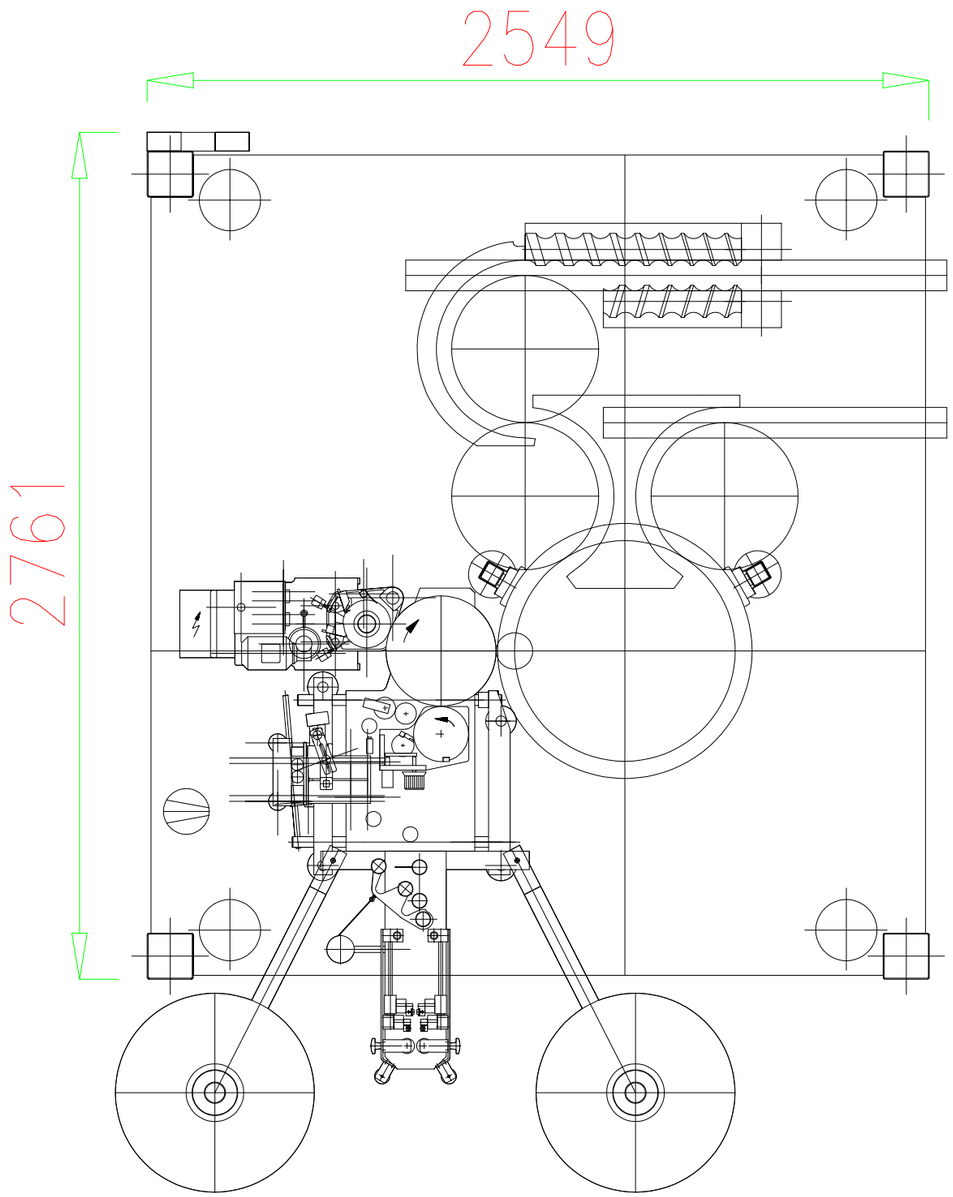

Note: *Please always refer to the weight information of each equipment to check the compliance with the floor capacity, especially for those installations not at ground level*

Ladders and Platforms are not in the Sidel scope unless specified in the quotation

Customer :	BBM BY YOUR SIDE IN PACKAGING	
Location:	Business Opportunity:	Date : 2025
Scope of supply: FULL LINE / PARTIAL LINE / STAND ALONE / UPGRADE	Drawn by : UC	Scale : 1:20
PRELIMINARY LAYOUT	FOR INFORMATION ONLY	

This Drawing is BBM property and contains or may contain BBM confidential information. Information contained in this drawing is for the exclusive use of the recipient and shall be kept strictly confidential by the recipient and shall not be disclosed to any third party without BBM's express consent. This drawing shall not be used directly or indirectly by the recipient for any purpose other than those for which it was supplied. All rights, including Intellectual Property Rights, including those for, are reserved to BBM. No representation or warranty, express or implied, is made by BBM with respect to the truth, accuracy, sufficiency or absence of defect of the information contained in this drawing or with respect to third party intellectual property rights.

Drawing N°: - CAD file: BBM		Format A3